SHAFT SIZE	øD	L1	d	L2
6mm	6 [0.236]	12 [0.472]	0.7 [0.028]	10 [0.394]
8mm	8 [0.315]	19 [0.748]	0.5 [0.020]	15 [0.591]
10mm	10 [0.394]	20 [0.787]	no flat	n/a
3/8"	9.5 [0.375]	20 [0.787]	1.2 [0.047]	10 [0.394]

REVISIONS		
REV	DESCRIPTION	DATE
–	INITIAL RELEASE PER ECO 07730	09/12/19

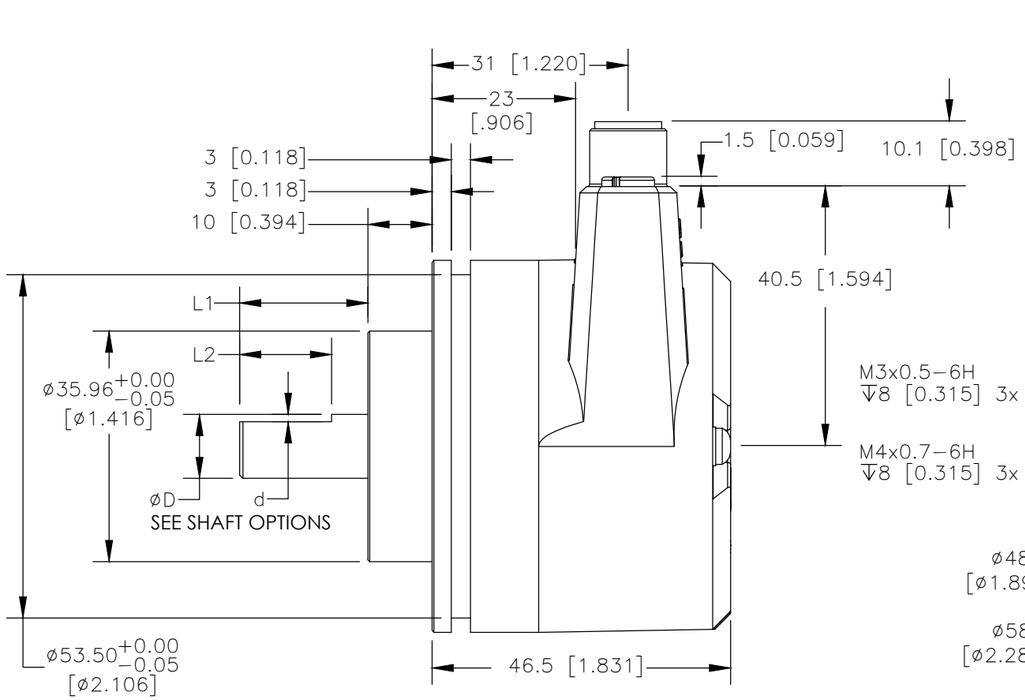

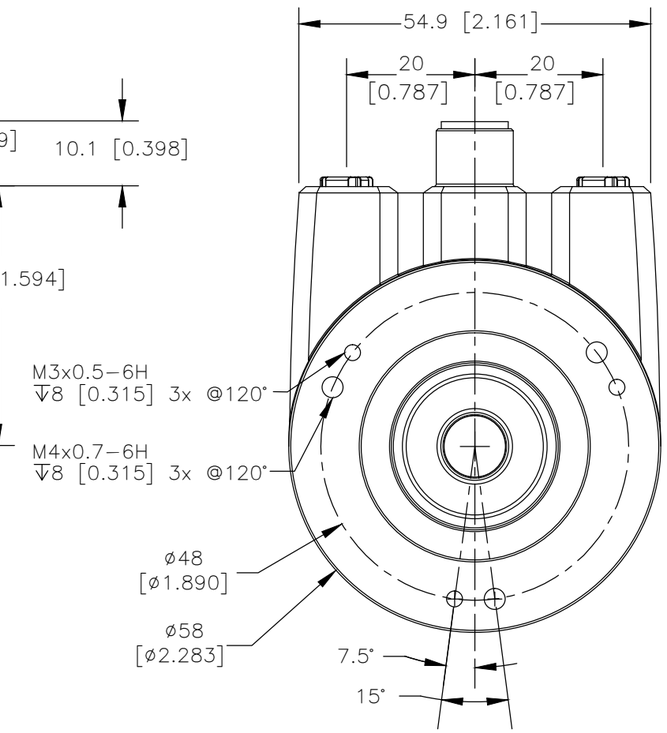

NOTE:

Primary dimensions are in mm, secondary dimensions SI units [inches] in brackets for reference only.

THIRD ANGLE PROJECTION

ENCODER PRODUCTS COMPANY

www.encoder.com

		APPROVALS	DATE
DIMENSIONS ARE IN INCHES		DRAWN GMA	08/14/2019
ISSUE DATE 08/16/19	TOLERANCES	CHECKED	
NEXT ASSEM.	DECIMAL ± .005	RESP ENG	
PREV. ASSEM.	DECIMAL ± .01	MFG ENG	
PART NUMBER	ANGULAR ± .1°	QUAL ENG	

NAME AND TITLE: MODEL A58SE CLAMPING FLANGE COMPACT

DWG NUMBER: A58SE−MP

REV.: –

DWG SIZE: B | SCALE: NONE | SHEET 1 OF 1