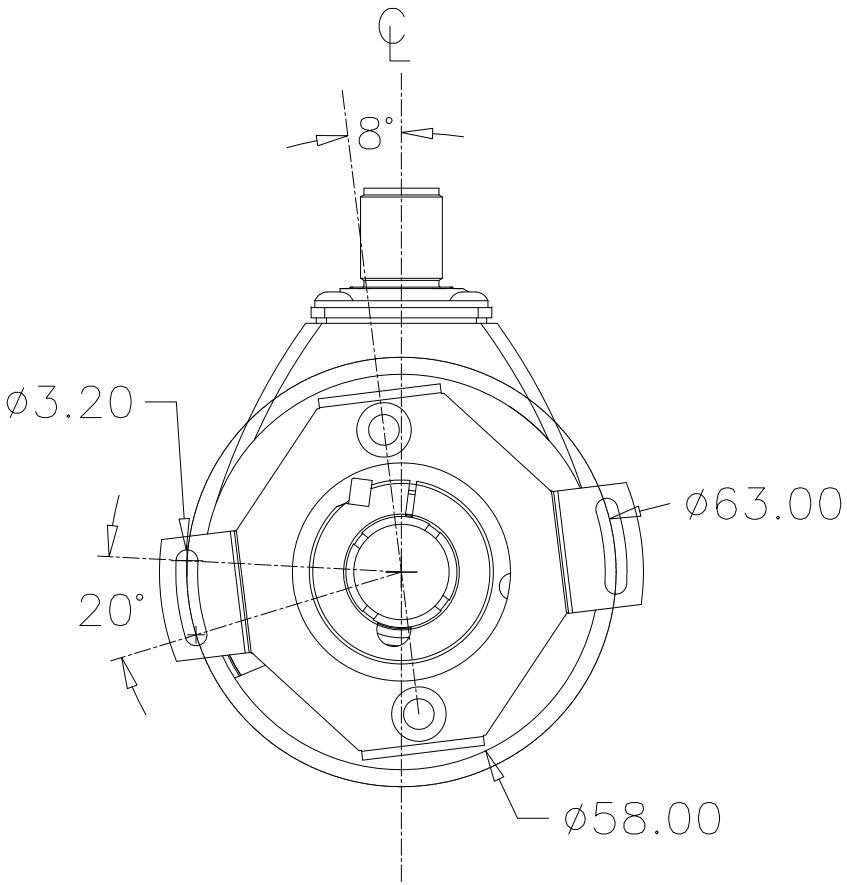

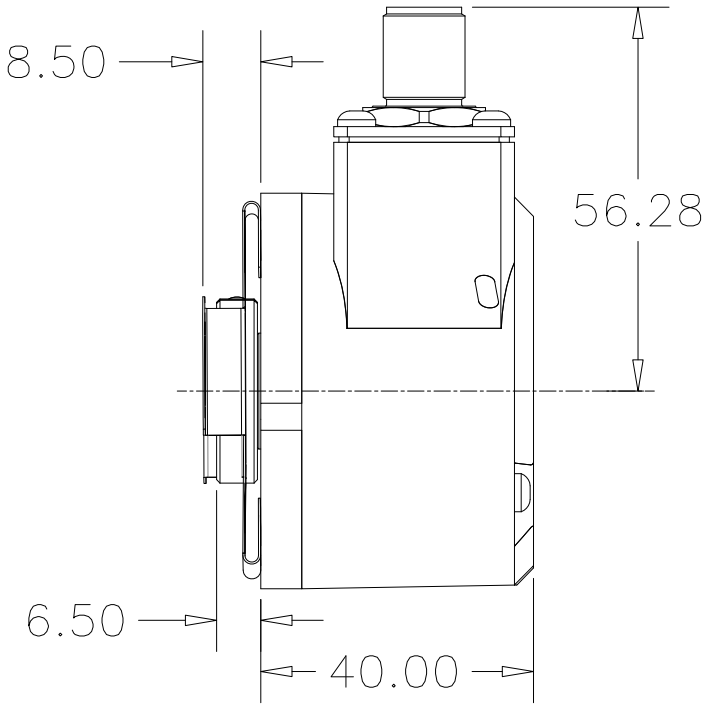

Drawing Scale - 1.00" = 25.4mm

All Dimensions are in mm, tolerance of +/- 0.127mm or +/-0.254 unless otherwise specified

Sheet 1 of 1		British encoder products Unit 33 Whitegate industrial estate Tel: 01978 262100 Fax: 01978 262101		– REVISION HISTORY –		
				Iss.	Description of latest revision :–	Date :–
				A	Dimension Drawing for Website	11–9–17
		DRAWN BY: EPC/BEPC				
	FULL PROJECT NAME: SA58H Flex SR		A4 THIRD ANGLE PROJECTION			