RXTXD : Receiver - Transmitter
Versatile Encoder Interface Unit

BRITISH ENCODER PRODUCTS COMPANY

Features

- DIN Rail Mount.
- Level Changes from Vcc to 5V.
- Signal Conditioner, or Repeater for Distance Transmission.
- 2 or 3 Way Splitter/Level Changer.
- Encoder Tester/Verifier.

This lightweight DIN rail mountable unit, Line Driver and Line Receiver, comes in a stylish green PC/ABS self-extinguishing material blend. Configurable as a level changer, line repeater, splitter or encoder tester. The RXTXD will accept TTL, RS422, RS485, PP, NPN, NPN OC, or, PNP encoder inputs at 5V, or HTL, PP, NPN, NPN OC & PNP at 6-28V. It will provide up to 3 outputs in any combination of TTL, RS422, RS485, PP, NPN or PNP, at 5V, or, HTL, PP, NPN or PNP, at 6-28V. A series of LEDs on the front panel indicates power and signal presence. Connections are made via the easily accessible screw terminals as standard. This device may be used as both a Line Driver and Line Receiver.

RXTXD Ordering Guide

Blue type indicates price adder options. Not all configuration combinations may be available.
Contact Customer Service for details.

RXTXD — 1 — V3 — 5V — 5H — 4P — 4H — 5P

VERSION
- 1 Receiver/Transmitter (One Output)
- 2 Receiver/Transmitter (Two Outputs)
- 3 Receiver/Transmitter (Three Outputs)
- 4 Line Repeater/Refresher (One Output)
- 5 Level Changer/Conditioner (One Output)
- 6 Encoder Signal Verifier/Tester (One Output) [3]

INPUT VOLTAGE
- V5 5V Only
- V3 5-24V [1]

ENCODER/SENSOR POWER [2]
- 5V 5V Only
- 24V 5-24 Vcc

INPUT SIGNAL
- 5H 5V Differential Driver [4]
- 5N 5V NPN Open-Collector
- 5P 5V Push-Pull S/Ended [5]
- 24H 24V Differential Driver [6]
- 24N 24V NPN Open Collector
- 24P 24V Push-Pull S/Ended [7]

OP1 OP2 OP3

FINAL OUTPUT SIGNAL
- 5H 5V Differential Driver [4]
- 5P 5V Push-Pull S/Ended [5]
- 4H 24V Differential Driver [6]
- 4P 24V Push-Pull S/Ended [7]

For specification assistance call Customer Service at +44 (0)1978 262100

Specifications

Input Voltage.....6V to 28V Max
Current Consumption .....250 mA Typical
Repeater Output Voltage .5V or Vcc
Frequency Response.....Up to 800 Khz
Weight.....250g
Enclosure .....PC/ABS, IP20
Terminal.....Screw Type 30/12 AWG

NOTES:
1. 28V Maximum Voltage.
2. Encoder/Sensor and output signal voltages are limited to the input voltage supplied.
3. To be used in series with encoder.
4. TTL, RS422 & RS485 Compatible.
5. TTL, NPN (Sink), PNP (Source), PP.
6. HTL Compatible
7. NPN (Sink), PNP (Source), PP

Rev: B

RXTXD : Receiver - Transmitter
Versatile Encoder Interface Unit

BRITISH ENCODER PRODUCTS COMPANY

RXTXD Specifications

Electrical

Input Voltage.....5V to 24V Max
Current Consumption .....250 mA Typical
Repeater Output Voltage.....5V or Vcc
Frequency Response .....Up to 800 Khz

Mechanical

Weight .....250 grams
Enclosure .....PC/ABS, IP20
Terminal.....Screw Type 30/12 AWG

Definitions

Version .....Number of complete sets of output channels
Input Voltage.....The voltage supplied to RXTXD. The input voltage sets the maximum voltage the RXTXD can supply the Encoder/sensor and maximum voltage of the output signals.
Encoder/Sensor Power.....The voltage supplied by the RXTXD to the encoder/sensor.
Input Signal .....The signal voltage level from the encoder/sensor to the RXTXD.
Final Output Signal.....The Signal voltage level from the RXTXD to the receiving device.

Example: If the input voltage is V3, Encoder/sensors power is 24V.
Output 1 is 4H, Output 2 is 5H.

Set input voltage to 24V
Encoder/sensor power = 24V
Output 1 = 24V
Output 2 = 5V

Set input voltage to 12V
Encoder/sensor power = 12V
Output 1 = 12V
Output 2 = 5V

RXTXD : Receiver - Transmitter

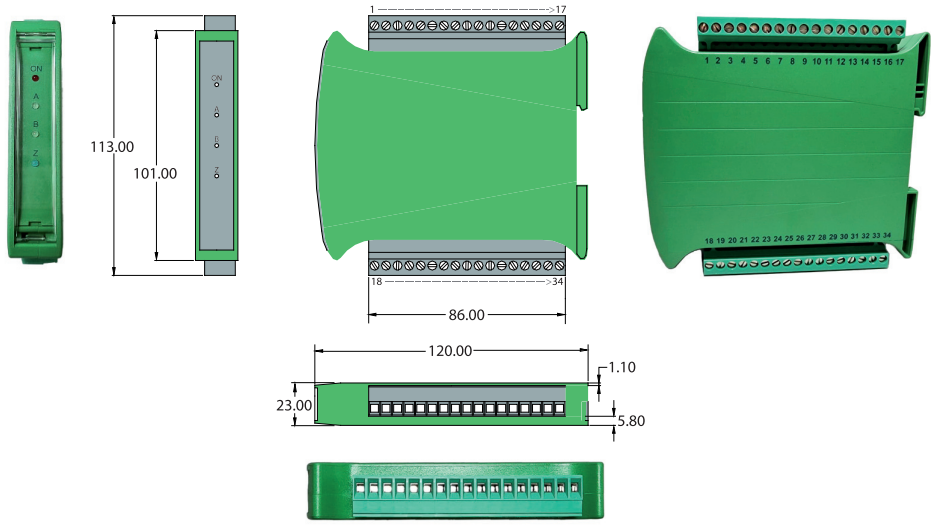

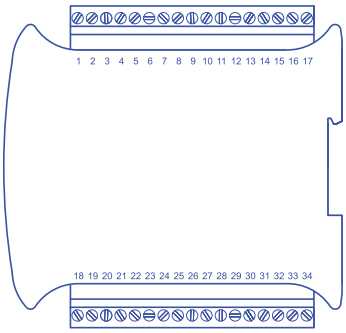

TMNL	SIGNAL	
1	Z'	Output 3 Signals
2	Z	
3	B'	
4	B	
5	A'	
6	A	
7	0V	
8	N/C	
9	Z'	Output 2 Signals
10	Z	
11	B'	
12	B	
13	A'	
14	A	
15	0V	
16	0V	Input Power
17	+Vcc	

TMNL	SIGNAL	
18	N/C	
19	Z'	Output 1 Signals
20	Z	
21	B'	
22	B	
23	A'	
24	A	
25	0V	
26	N/C	
27	Z'	Input Signals From Encoder
28	Z	
29	B'	
30	B	
31	A'	
32	A	
33	0V	Encoder Supply
34	+Vcc	

All inputs and outputs may not be present, depending on the RX/TXD version.

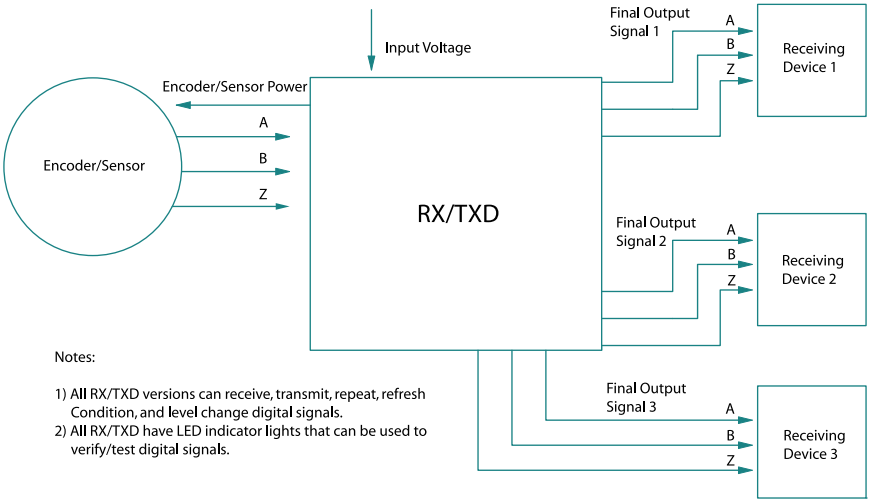

Notes:

1) All RX/TXD versions can receive, transmit, repeat, refresh Condition, and level change digital signals.
2) All RX/TXD have LED indicator lights that can be used to verify/test digital signals.